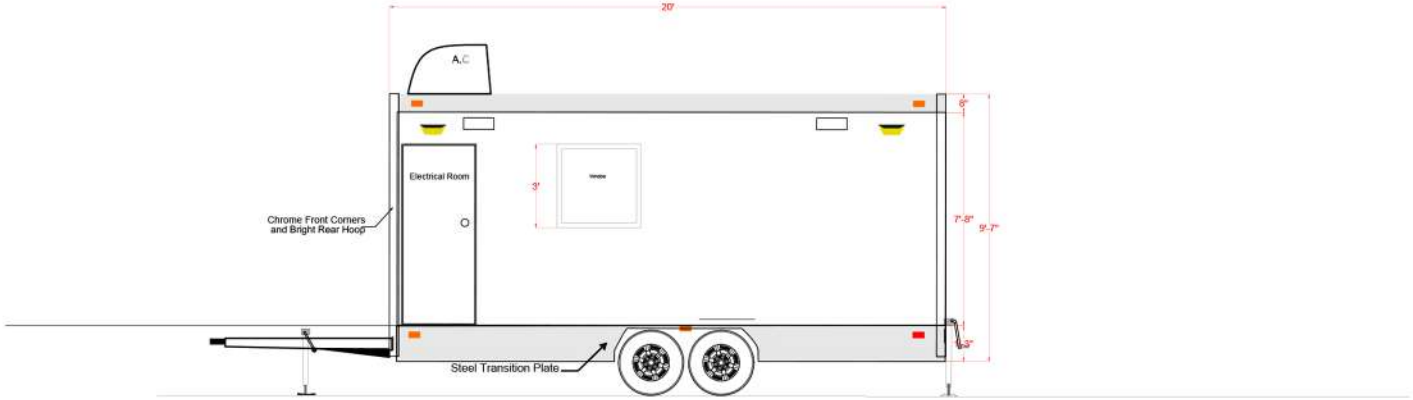

Elevation

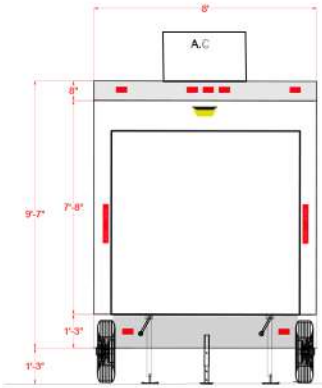

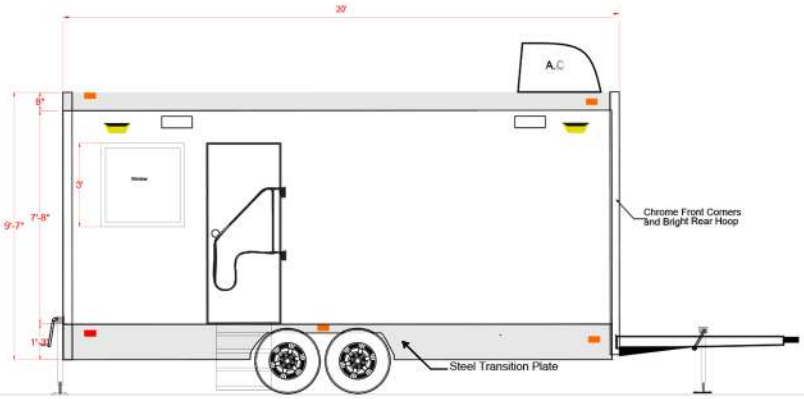

Back

Interior V.

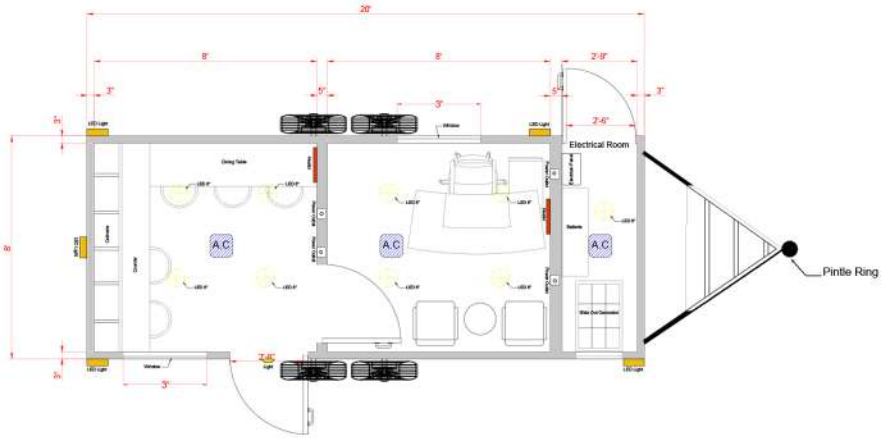

niu
833 Rue Beriault
Longueuil
Tel.: 1 855 550 3033
Info@niutoilet.com

Mobilio 3 20x8ft

Date: July 2025