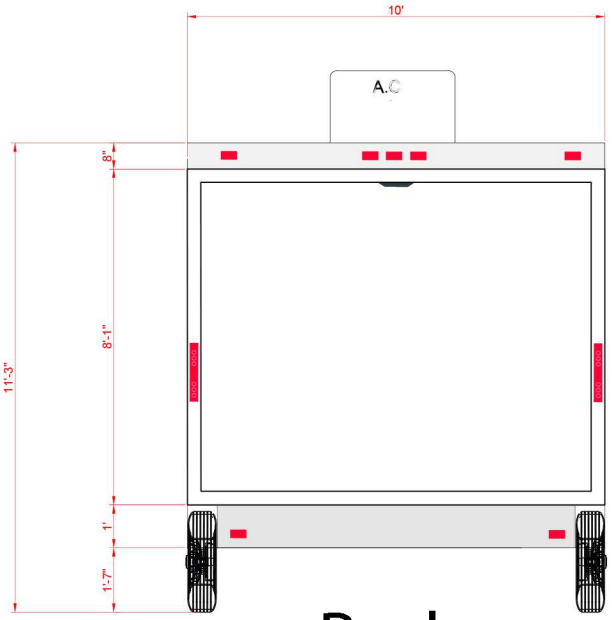

Back

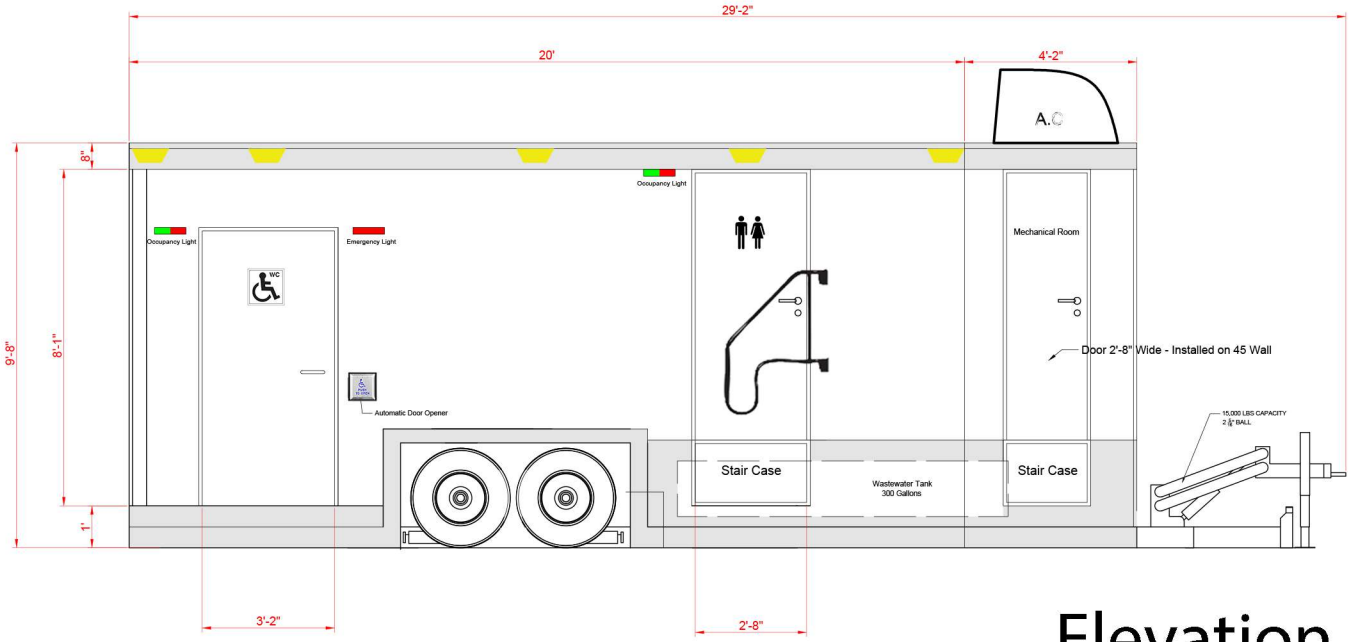

Elevation

Interior V.

- Door Circulation 4'-6" x 5'-9"
- Toilet Circulation 3' x 6'
- Sink Circulation 3'-8" x 5'-7"

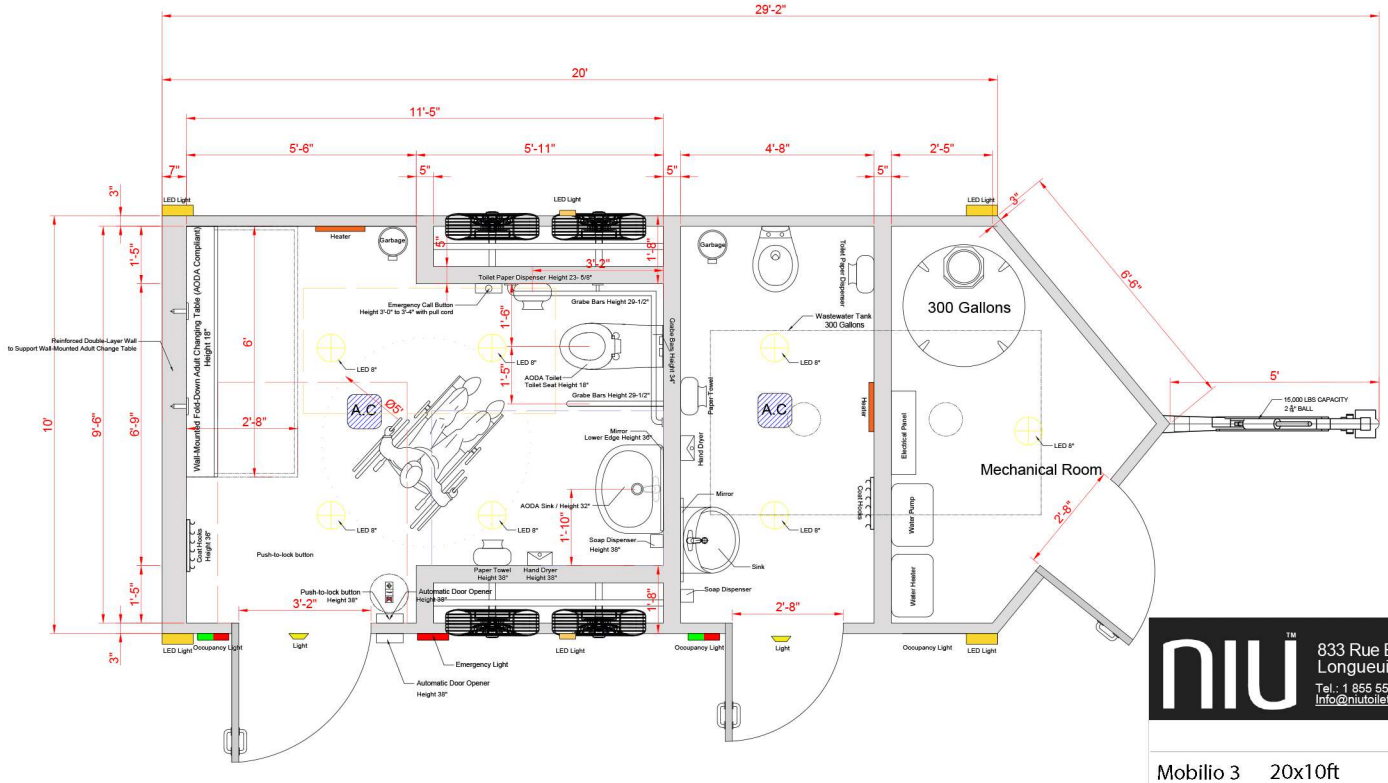

833 Rue Beriault
Longueuil
Tel.: 1 855 550 3033
Info@niutoilet.com

Mobilio 3 20x10ft

Date: Aug 08 2025